WOOD-FIRED OVEN

YS1500 OVEN DIMENSIONS

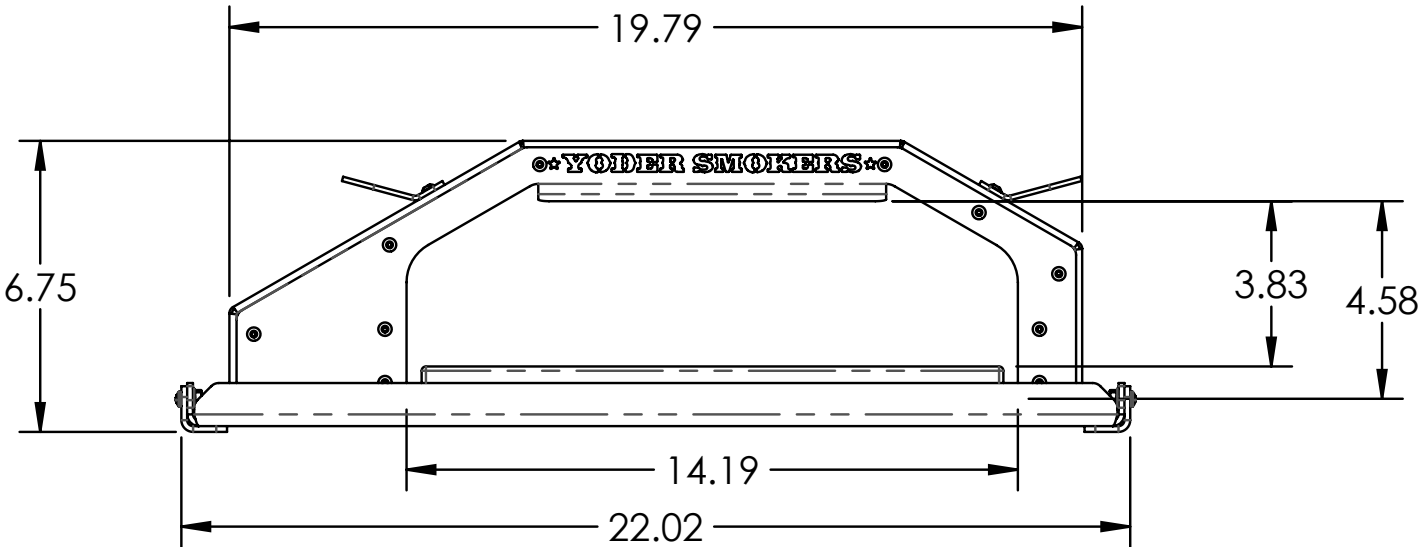

YODER SMOKERS

PREMIUM GRILLS & SMOKERS