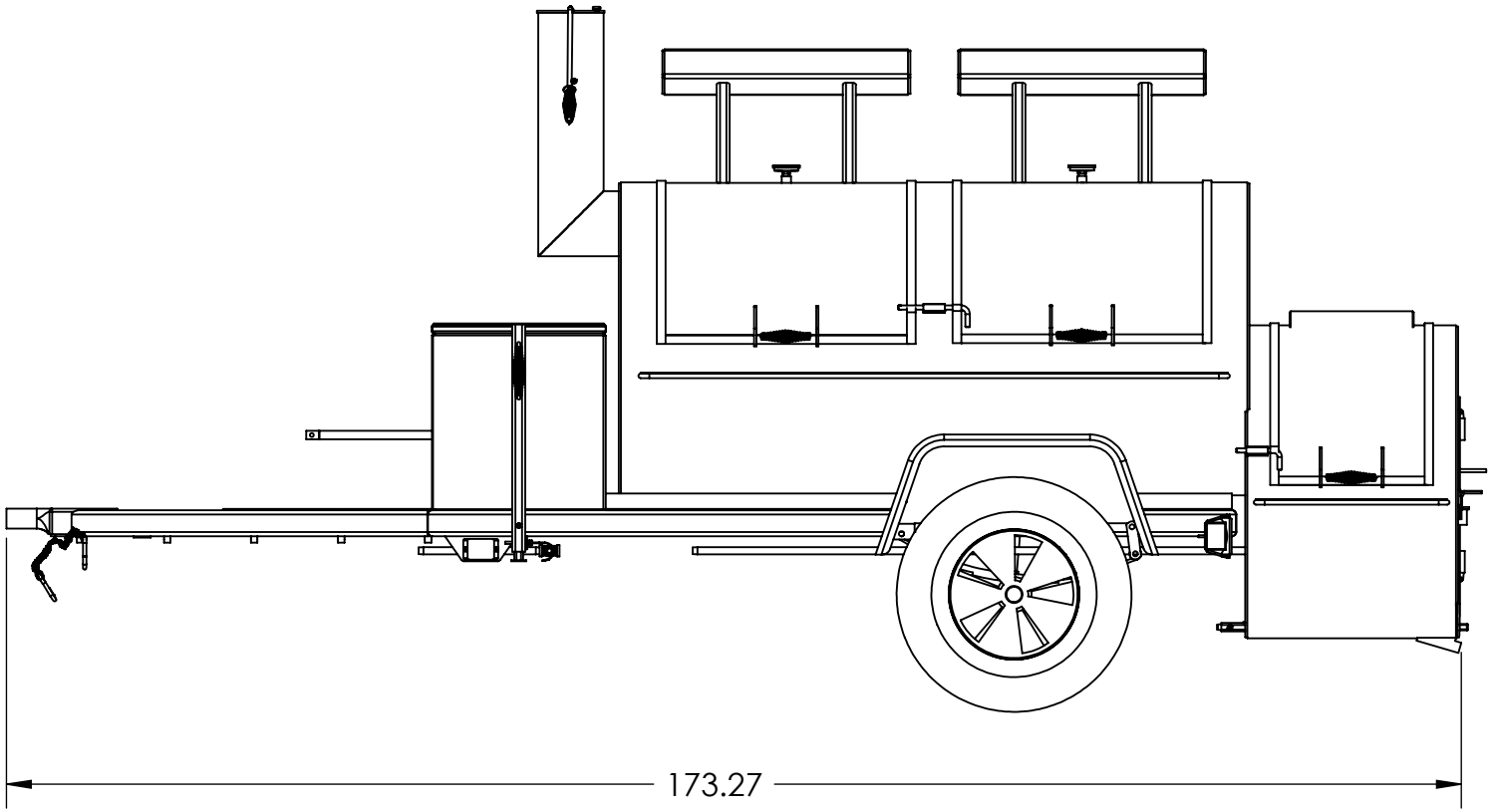
173.27

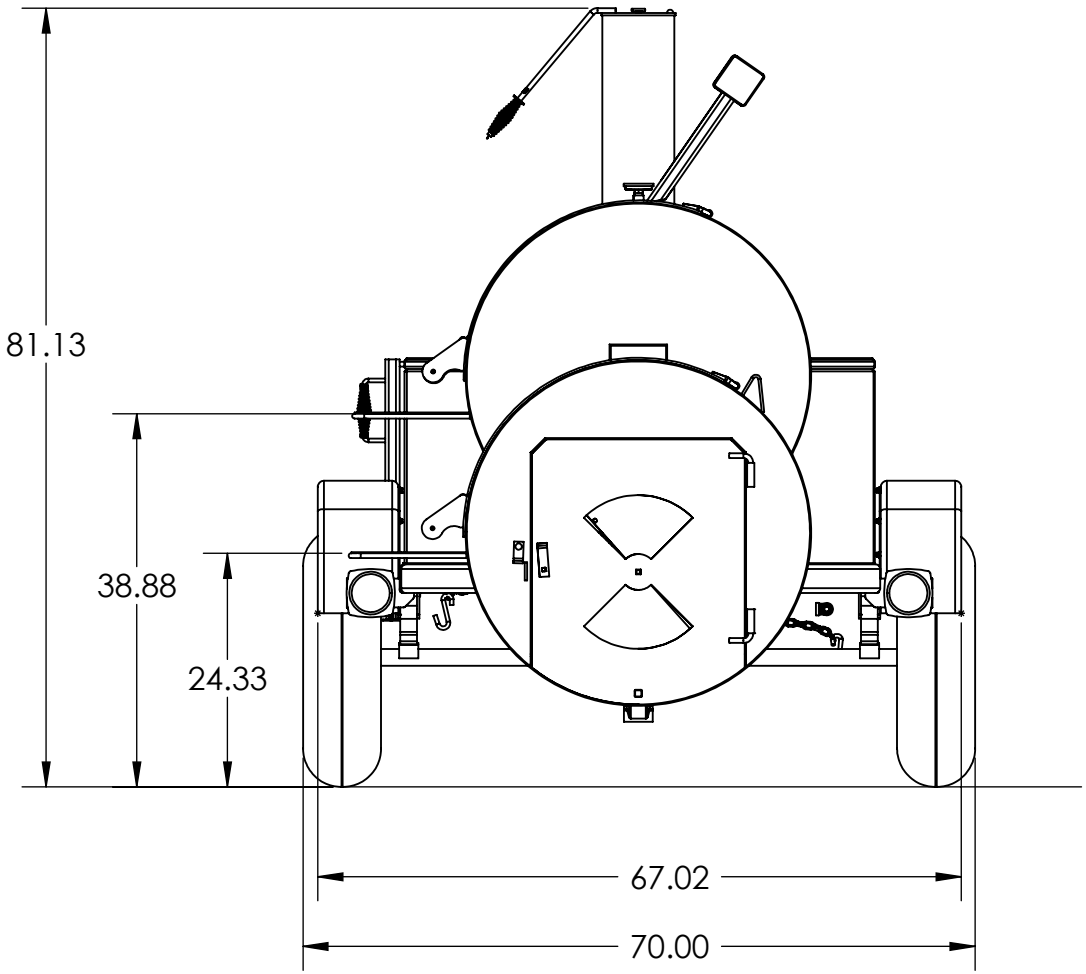
81.13
38.88
24.33
67.02
70.00